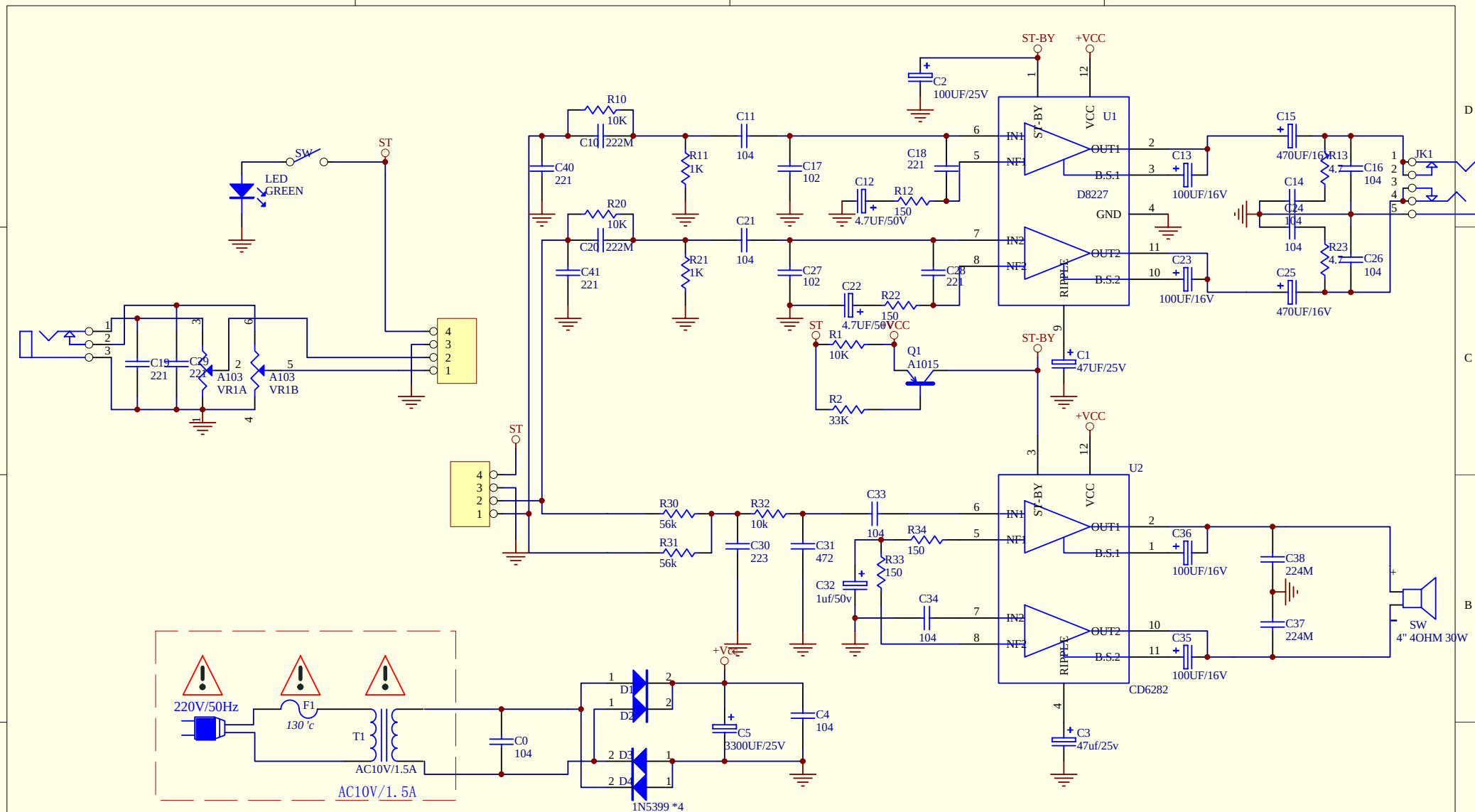

Title		
Size A4	Number M113 SCH	Revision 1.0
Date: 4-May-2009	Sheet of 1 OF 1	
File: E:\日机种\M系列机种\M113\m111.Bkp	Drawn By:	