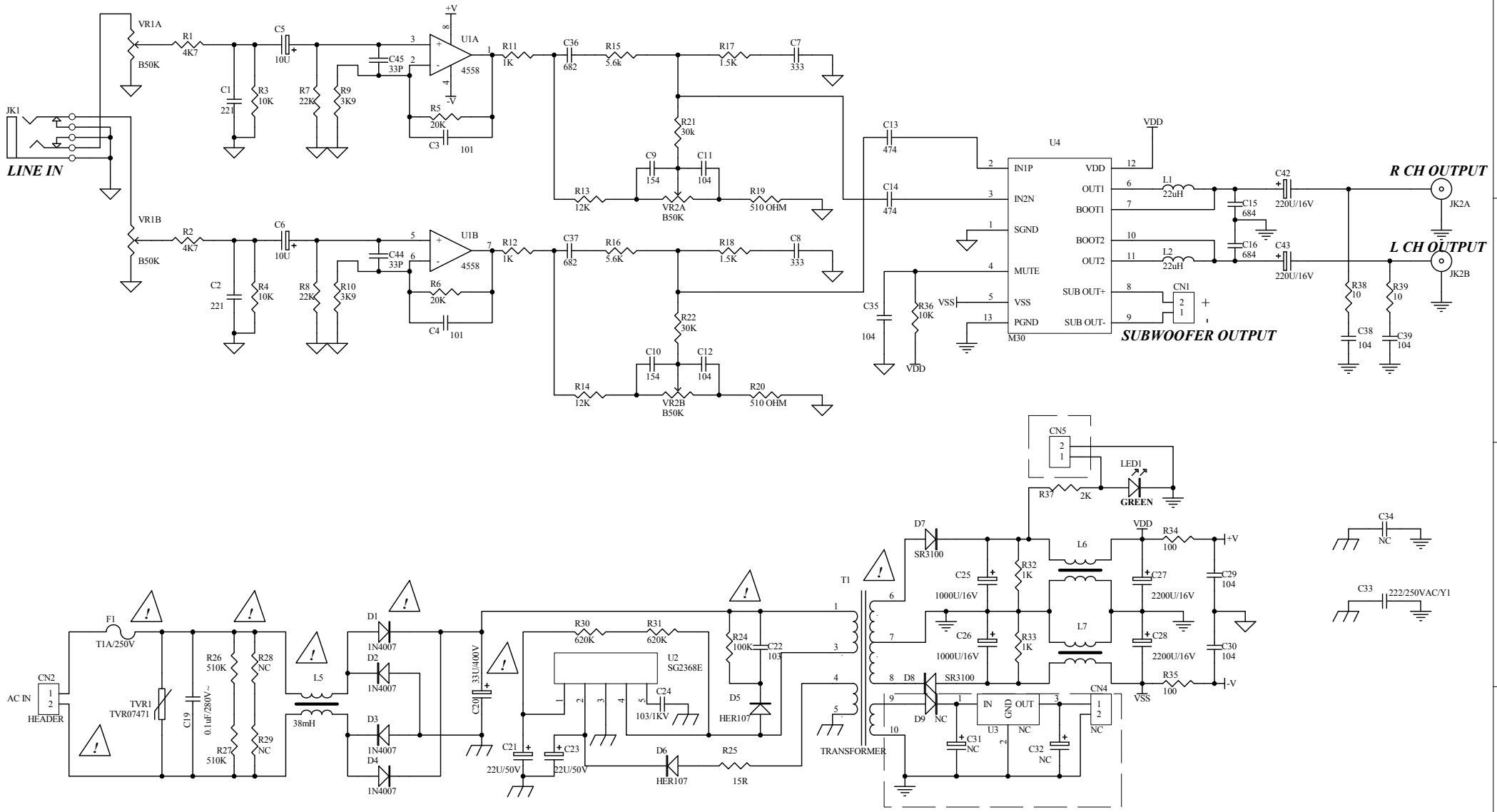

Title		
M200(11) M300(11)		
Size B	Number	Revision 1.0
Date: 24-Apr-2012		Sheet of
File: E:\work\M800(11).DDB		Drawn By: